Dimension Guide

90cm built-in induction hob

700 SERIES

Model:
EHI9575BF

Dimensions

	width	height	depth
Cut-out (mm)	880	44	490
Product (mm)	900	51	520

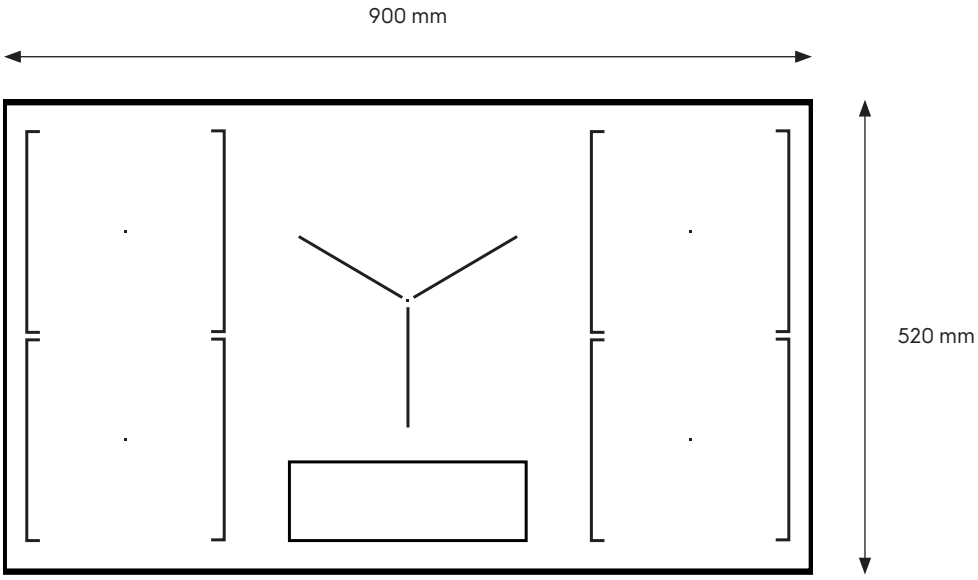

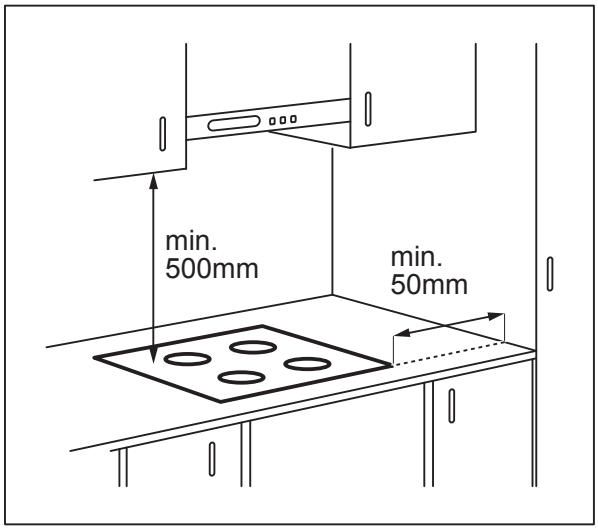

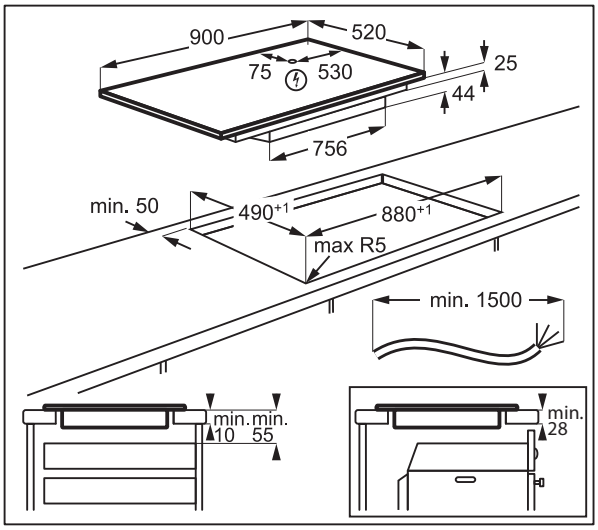

Please note! Dimensions to be used as a guide only. All customers MUST refer to the user manual supplied with the product for detailed installation instructions.

© 2025 Electrolux S.E.A PTE. LTD. ELX_DIM_EHI9575BF_Oct25

Electrolux